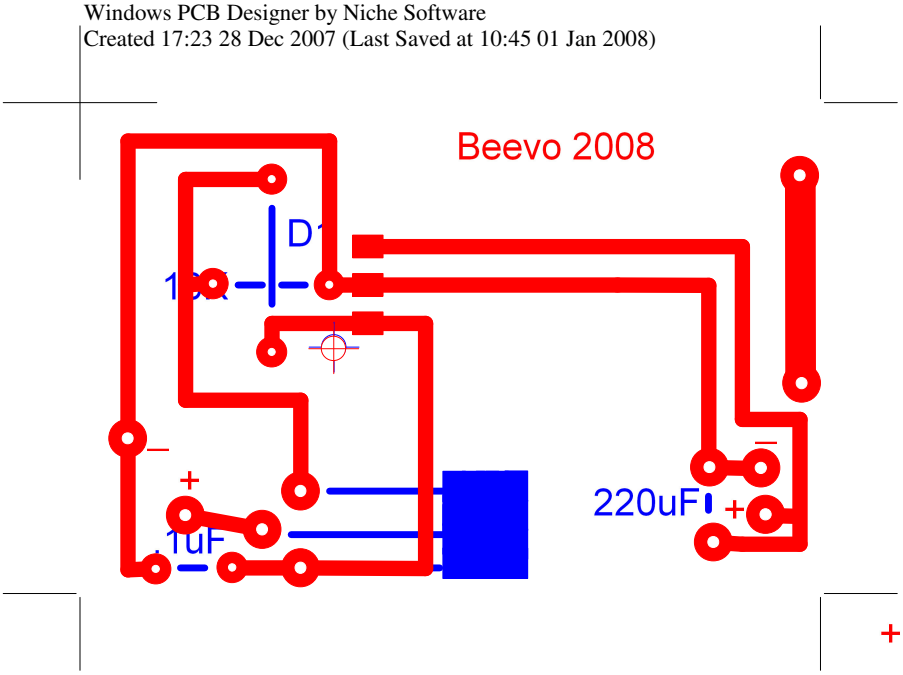File g:\canonbat.pcb, Version count 11, Proof print, Both sides on one print
Windows PCB Designer by Niche Software
Created 17:23 28 Dec 2007 (Last Saved at 10:45 01 Jan 2008)