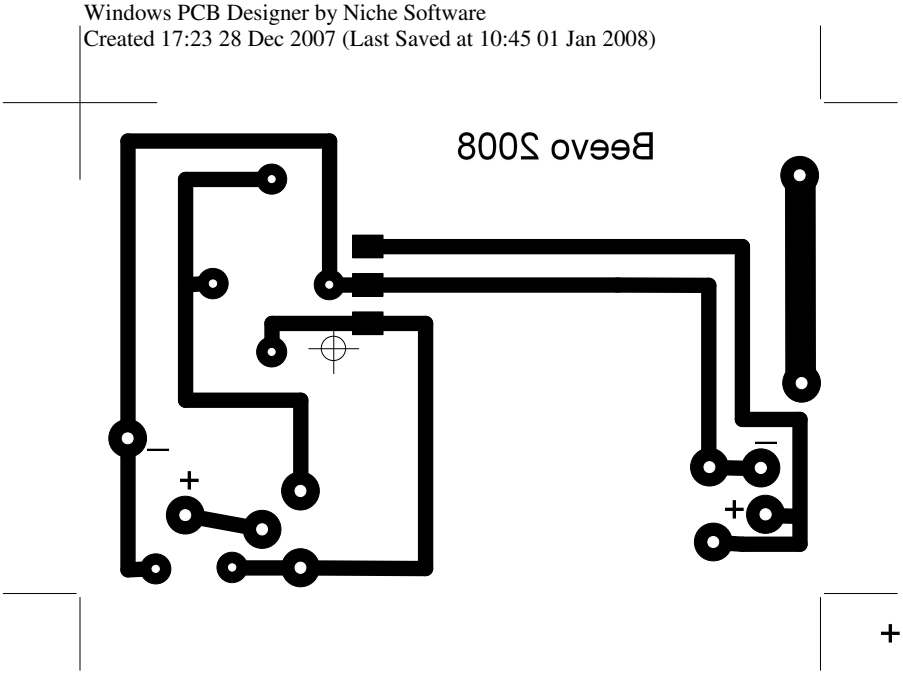File g:\canonbat.pcb, Version count 11, Mask, Solder side, RED
Windows PCB Designer by Niche Software
Created 17:23 28 Dec 2007 (Last Saved at 10:45 01 Jan 2008)